PC/HD Audio over CAT5 Receiver at 50 Meters

Operation Manual

CA-COMP50R

TABLE OF CONTENTS

1. Introduction 3
2. Features **3**
3. Package Contents **3**
4. Operation Controls and Functions **4**
4.1 Front Panel 4
4.2 Rear Panel 5
5. Specifications **6**
5.1 Audio Performance 6

1. Introduction

This is the receiver (Rx) unit of PC/HD audio over CAT5 solution, works with the transmitter that can extend PC/HD with audio signal through CAT-5 cables for a distance up to 50 meters. The installation of PC/HD audio over CAT5 is easy and quick, simply place receiver next to your display, and get all necessary cables connected to complete and enjoy.

2. Features

- Supports PC/RGB and HD/YCbCr/YPbPr format output.
- Supports CAT-5 cable.
- Supports high definition (HD) output source up to 1080P.
- Supports PC output source up to UXGA.
- Supports Dolby AC3/PCM 2CH Toslink output audio.
- The output signal will depend on the input source.
- Easy to install and simple to operate.

3. Package Contents

- PC/HD audio over CAT5 receiver box.
- 5V/1A DC power supply adaptor.
- Operation Manual.

4. Operation Controls and Functions

4.1 Front Panel

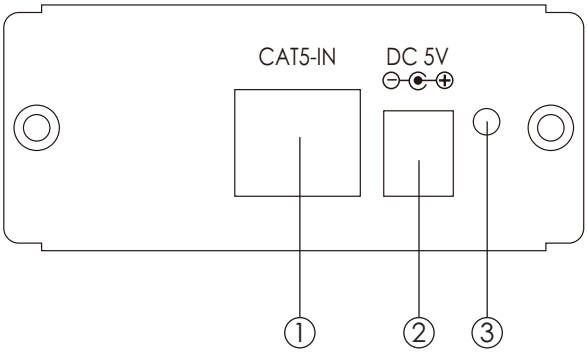

1. CAT5-In: Connected the video output to the video input of the CAT5 receiver unit using CAT-5 cable.
2. DC 5V/1A: Power input.
3. Power ON/OFF indicator.

4.2 Rear Panel

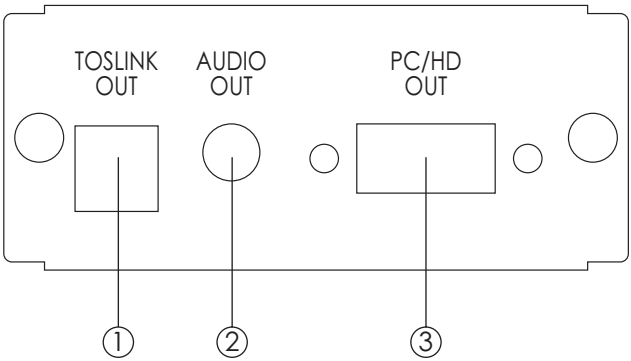

1. Toslink output: Connected SPDIF output to the display audio input.
2. Audio output: Connected audio L/R output to the display audio input.
3. PC/HD output: Connect the PC/HD output signal with D-Sub 15pin cable or D-Sub to 3 RCA cable to the display.

5. Specifications

Supported Resolutions	HD: up to 1080p
Output Ports	VGA, Audio L/R or Toslink/SPDIF
Input Port	CAT-5
Audio Input	Toslink: Dolby AC3 / PCM 2CH L/R: PCM 2CH
Power Supply	5V/1A DC (US/EU standards, CE/FCC/UL certified)
Dimensions (mm)	99.5(W) x 77(D) x 32.5(H)
Weight(g)	200
Chassis Material	Metal
Silkscreen Color	Black/Silver
Operating Temperature	0°C ~40°C

5.1 Audio Performance

Input Level/Freq.	Output Terminal	Channel	Output Sample Rate	Reference Level Vrms/dB	THD+N <0.01%	SNR >80dB	Crosstalk <-60dB	NOTE
Analog L/R 1Vrms/1KHz	Analog	L	N/A	2.047	<0.01%	>80dB	<-60dB	Frequency:1KHz; Sample Rate:48KHz
		R		2.015	<0.01%	>80dB	<-60dB	
	Toslink	L	44.1KHz	-2.37	<0.01%	>80dB	<-60dB	
		R		-2.5	<0.01%	>80dB	<-60dB	
Input Level/Freq.	Output Terminal		Output Sample Rate	Reference Level	THD+N <0.01%	SNR >80dB	Crosstalk <-80dB	NOTE
Toslink -6dB/1KHz (32~192KHz)	Analog	L	N/A	1.35	<0.01%	>80dB	<-60dB	Frequency:1KHz; Sample Rate:48KHz
		R		1.35	<0.01%	>80dB	<-60dB	
	Toslink	L	32~192KHz	-6	<0.01%	>80dB	<-60dB	
		R		-6	<0.01%	>80dB	<-60dB	

Cypress Component over CAT5 series:

Product	Description
CA-COMPAT	Component over CAT5 Transmitter
CA-COMP 50R	Component over CAT5 Receiver at 50 meters
CA-COMP 100R	Component over CAT5 Receiver at 100 meters