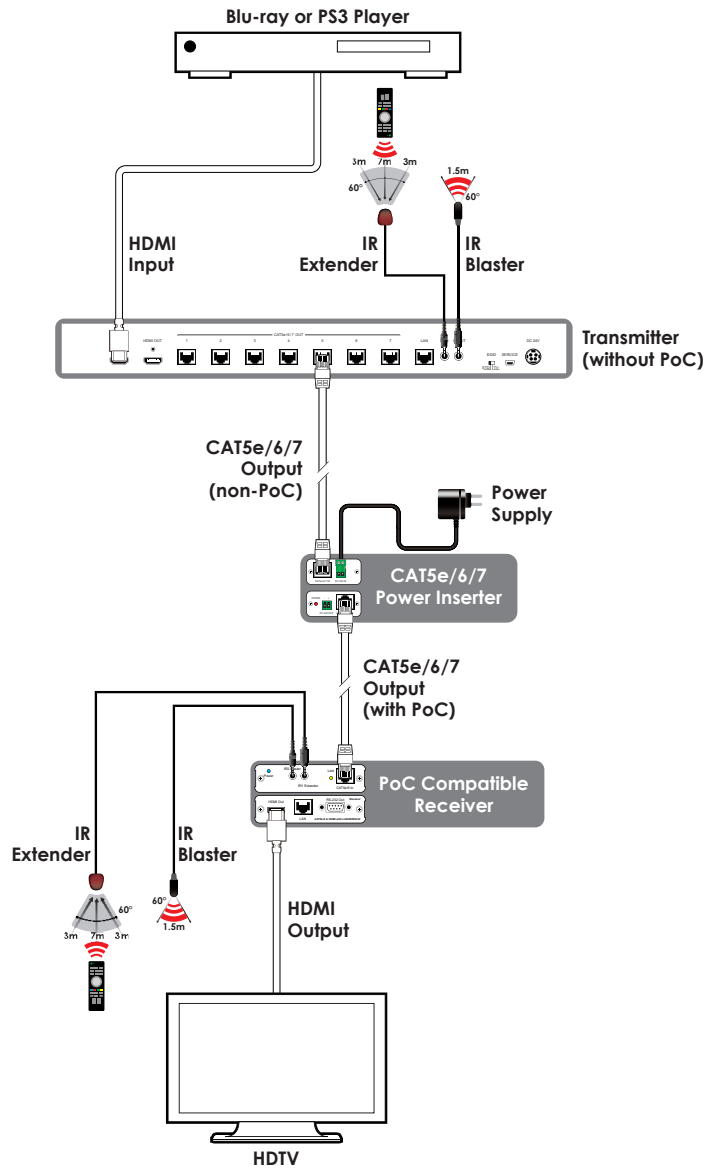
Blu-ray or PS3 Player
3m
7m
3m
60°
1.5m
60°
HDMI
Input
IR
Extender
IR
Blaster
Transmitter
(without PoC)
CAT5e/6/7
Output
(non-PoC)
Power
Supply
CAT5e/6/7
Power Inserter
CAT5e/6/7
Output
(with PoC)
PoC Compatible
Receiver
IR
Extender
IR
Blaster
60°
3m
7m
3m
60°
1.5m
HDMI
Output
HDTV