Models: DVR613 (8 Channel DVR)

You deserve to feel safe, secure & protected™

HDCVI Digital Video Recorder

Quick Start Guide

Thank you for purchasing a Watchguard HDCVI Digital Video Recorder
This Quick Start Guide covers basic setup, installation and use of your surveillance system.
For the full user manual, instructional videos, tips on using your surveillance system & warranty information, please visit: **www.watchguardsystems.com**

Version: WGDVR-Q119

1. Pre-Installation

1.1 Pre-Installation Safety Information

Before connecting your DVR (digital video recorder) or cameras, please ensure the following safe installation guidelines are adhered to.

- Do not place cords from the DVR where they can be pinched or stepped on.
- Do not place heavy objects on cords, or cover cords with rugs or carpet.
- Do not expose the DVR to excessive heat or moisture.
- Leave at least 50mm of space between the DVR and other objects to allow ample air circulation.
- Never immerse any component in water and do not spray cleaners or solvents on the cameras.
- Shut down and unplug the recorder before cleaning. When cleaning, use a damp, lint-free cloth only.
- Service of your DVR or surveillance cameras should only be handled by qualified technicians.

1.2 Connecting your DVR and Cameras

The following section will detail connecting the DVR (digital video recorder) and surveillance cameras. It is recommended that cameras and connections are tested before mounting. If there is no image, an error message or dark screen when first connecting cameras, see the **Troubleshooting** in Section 6 in this guide.

Refer to **1.3 DVR Rear Panel & Setup Diagram** for full DVR & system diagrams.

1. **Connect the cameras to the DVR:** Using coaxial cables, connect the BNC plugs to the DVR.
2. **Connect camera power:** Using a 12VDC power supply.
3. **Connect a display:** Using an HDMI or VGA cable, connect a monitor or television (not included).
4. **Connect the mouse:** Connect the USB mouse to the rear USB port, saving the front port for easy USB backup.
5. **Connect to your local network:** Using the included Ethernet patch cable, connect to your switch or router.
6. **Connect DVR power:** Using the supplied 12VDC 2A digital video recorder power supply.

Upon activating power, LED lights at the front of the DVR should turn on and the DVR will sound on startup. The DVR will then run your surveillance user interface. Cameras and LAN / Internet will be detected automatically. This completes a successful first boot of your surveillance system and you may begin configuring surveillance cameras.

1.3 DVR Rear Panel & Setup Diagram

NOTE: *Your DVR (digital video recorder) model may differ - the 8 channel DVR (CVR8COM) is referenced below.*

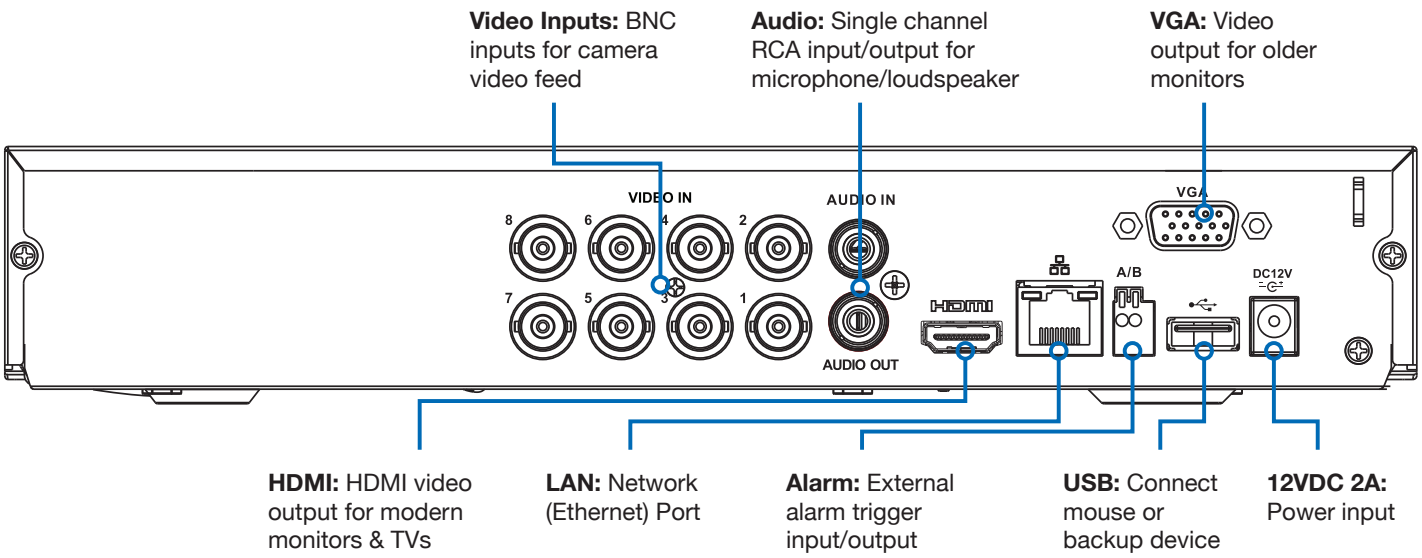

Fig. 1.1: DVR Rear Panel Diagram

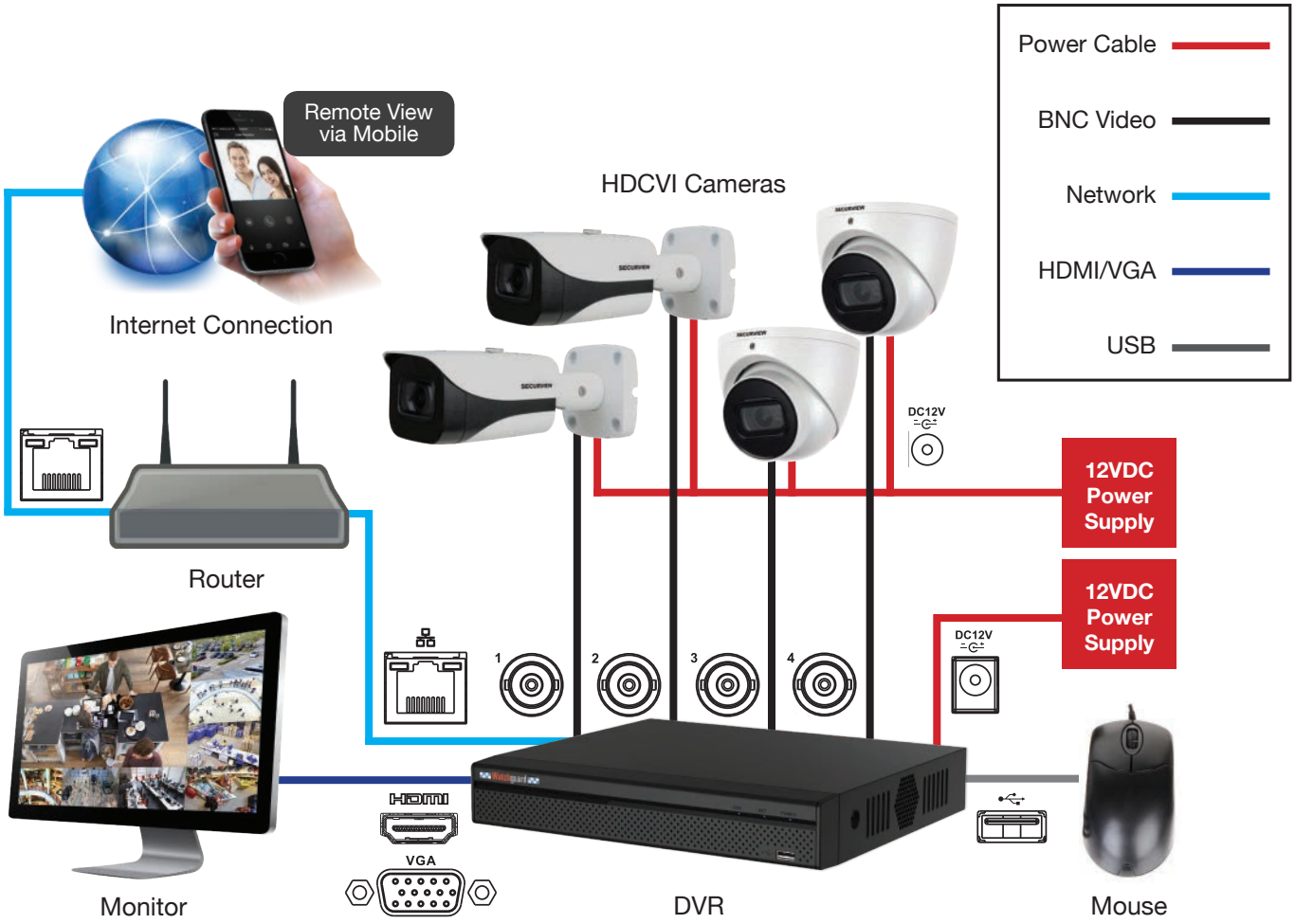

Fig. 1.2: System Setup Diagram

2. DVR and Camera Configuration

2.1 First Boot and Startup Wizard

After successful connection and boot of your DVR, you will be taken through first-time setup for your surveillance system. Here you will configure system security and begin customising your DVR, including setting camera encoding options, record scheduling, network setup and remote view configuration. A **physical keyboard is not required or supported;** an on-screen keyboard will appear when required.

NOTE: *Each setting shown in the Startup Wizard can be modified later via the DVR Main Menu. See the Menu Quick Guide in Section 6 or see the full user manual for more information.*

Following the prompts, complete each section in the Startup Wizard, as detailed below:

NOTE: *Screenshots have been edited for legibility in print.*

2.1.1 Language & Format

The Startup Wizard will first prompt you to select a **Language** and **Video Standard**. Enter a strong **admin user** password, using letters, numbers & symbols.

1. Select your desired language.
2. Select the video format matching your region (**PAL** recommended for Australasia & Europe, **NTSC** for North America.)

Fig. 2.1: Language & Video Standard

2.1.2 Securing your DVR

In the Startup Wizard, you will be prompted to change the **admin** user password. This is to prevent unauthorised remote access via the Internet to your DVR.

1. Enter a strong **admin** user password, using letters, numbers & symbols. Confirm this password.
2. *(Recommended)* Enter a **Prompt Question** (password hint).
3. *(Optional)* Draw an **Unlock Pattern** for quick unlocking.
4. *(Recommended)* Enter an email address to be used for password resets.
5. *(Recommended)* Enter security questions/answers to be used if the admin password is forgotten. Note that answers are **case-sensitive**.

NOTE: *Email address password resets require a mobile phone with the DMSS app & internet access.*

NOTE: *We **strongly recommend** setting up email password reset and security questions. If the password is forgotten and no recovery method is set up, the recorder will need to be sent back to Watchguard Systems for a system reset, which will incur a fee even if the system is still within the warranty period.*

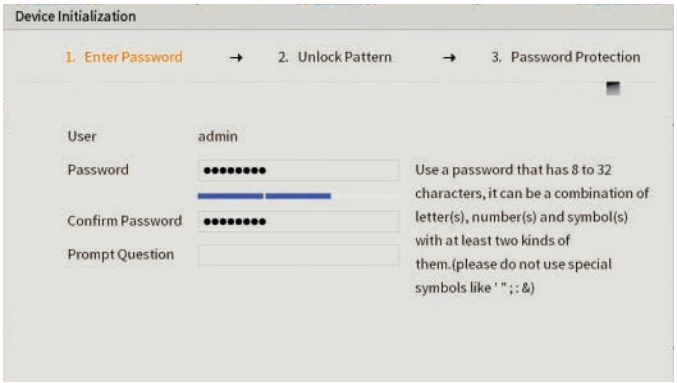

Fig. 2.2: Enter Password screen.

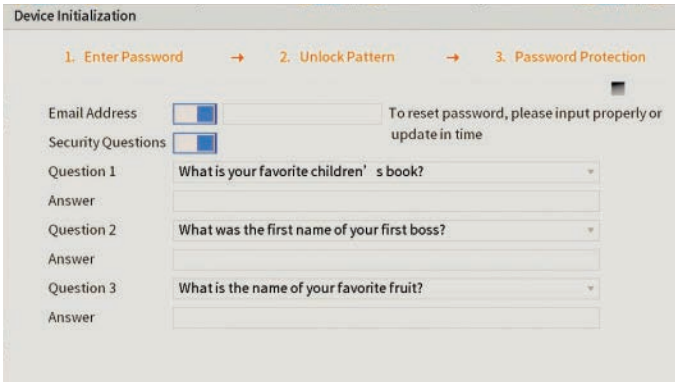

Fig. 2.3: Password Protection screen.

2.1.3 Automatic Updates

Here, you can choose whether you want your system to **Auto-check for updates**. This feature will notify you whenever a new firmware update is available and downloads it from Watchguard Systems.

For compatibility with future cameras and to receive security updates, we recommend automatic updates be turned **on.**

NOTE: *Automatic updates require an internet connection.*

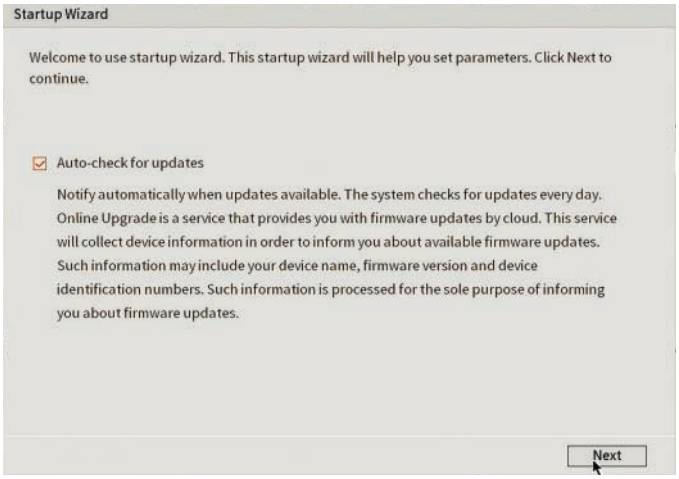

Fig. 2.4: Auto-check for updates

2.1.4 General DVR Setup

You will now be directed to **General** setup. Here you can confirm basic options of your DVR. By default, your DVR is set have 5 minutes instant playback and logout automatically after 10 minutes. You can also change mouse sensitivity and confirm date & time.

Default settings are adequate to get started, we recommend checking the following:

1. In the **General** menu, assign a name to your DVR by changing the **Device Name** field.
2. Click Next to go to the **Date & Time** menu and confirm correct settings. This directly affects recording, footage search & playback. You can optionally enable NTP to ensure a correct time (this requires an internet connection).
3. Users in NSW, VIC, SA, TAS and ACT will need to **enable DST** (Daylight Saving Time). Adjust **Start Time & End Time** settings according to your region and the year.

NOTE: *Daylight Saving Time begins at 2am on the first Sunday in October, when clocks are put forward one hour. It ends at 2am (which is 3am Daylight Saving Time) on the first Sunday in April, when clocks are put back one hour.*

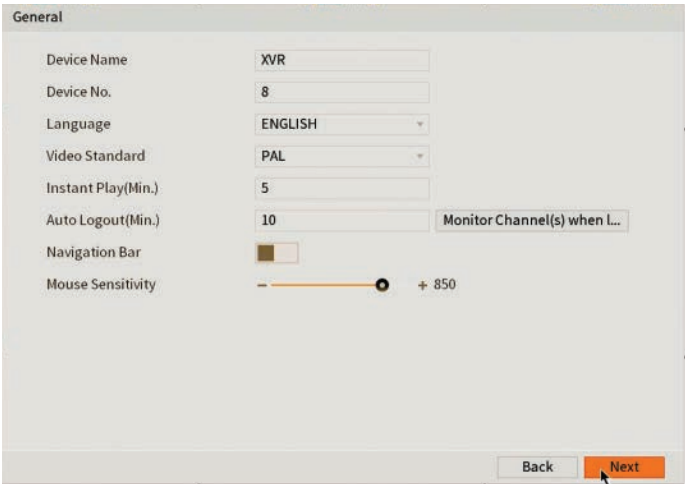

Fig. 2.5: General setup section

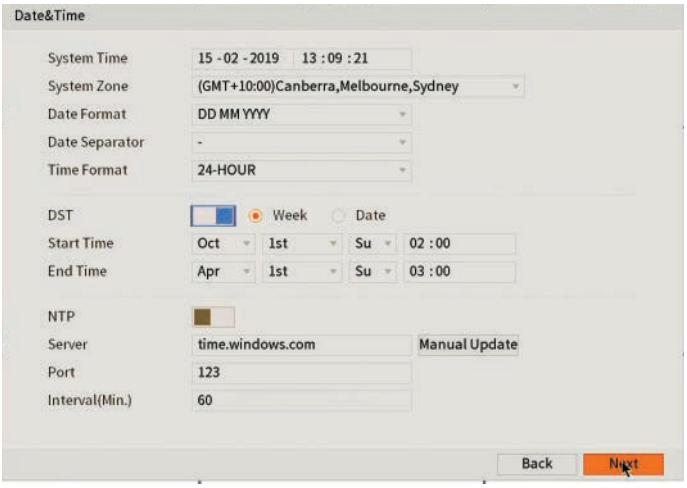

Fig. 2.6: Date & Time setup

2.1.5 Configuring Network, P2P, and Remote View

NOTE: *For the following section, please ensure the LAN (Local Area Network) is connected to your router or switch and that your Internet connection is available. Also, have your Internet connected phone or tablet ready for configuring surveillance remote view.*

Network setup will be prompted next, enabling you to connect your DVR to the Internet. First ensure that your DVR is connected to your switch or router via the included CAT5 cable (detailed in Section 1.3). For the simplest setup we recommend using DHCP to connect to the Internet. You will then be prompted to configure **P2P** for remote view on your device.

1. In the **Network** section, see Fig. 2.8.
2. For the **Mode** option, select **DHCP** (Dynamic Host Configuration Protocol).
3. Should you wish to use a static address, contact your Internet administrator for details.
4. Click **Next** to continue.
5. Click **Enable** to enable P2P remote view.
6. DVR **Status** should read **Online**. This indicates an active Internet connection. (This may take a few minutes).
7. Scan the left QR code, **Cell Phone Client**, or search your App Store to download the **iDMSS/gDMSS** or the **EasyviewerLite** app.

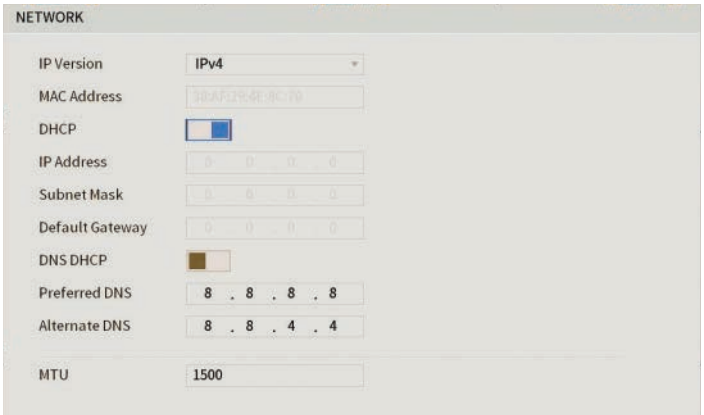

Fig. 2.7: Network setup section settings (example only)

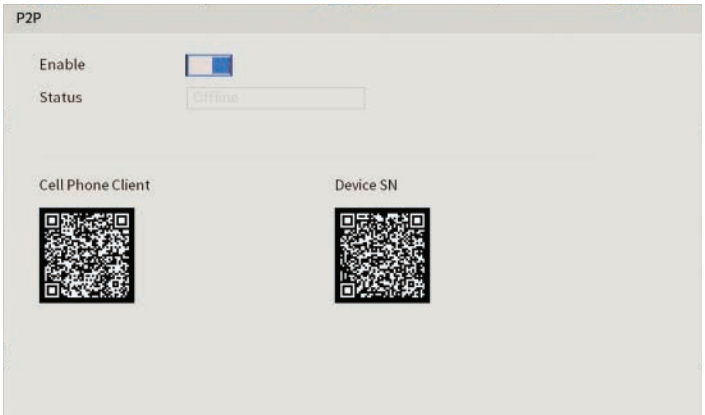

Fig. 2.8: P2P setup section, with QR codes (example only)

The following details configuring remote view via the **iDMSS (Apple iOS) or gDMSS** (Android) on your device. Depending on the device, menus may function or appear slightly different to those explained below.

1. Select the **Camera** button on the app home screen.
2. Open the application menu and select the **Device Manager** tab.
3. To add your DVR, select add device .
4. In the **Add Device** menu, select **Wired Device**, then select **P2P**.
5. **Name** your DVR and enter your **admin password**.
6. In the **SN** field, select the QR code icon .
7. Scan the **Device SN** QR code (shown in Fig. 2.9). The SN will be auto-filled if the scan is successful.
8. Select **Start Live Preview** to view your cameras.

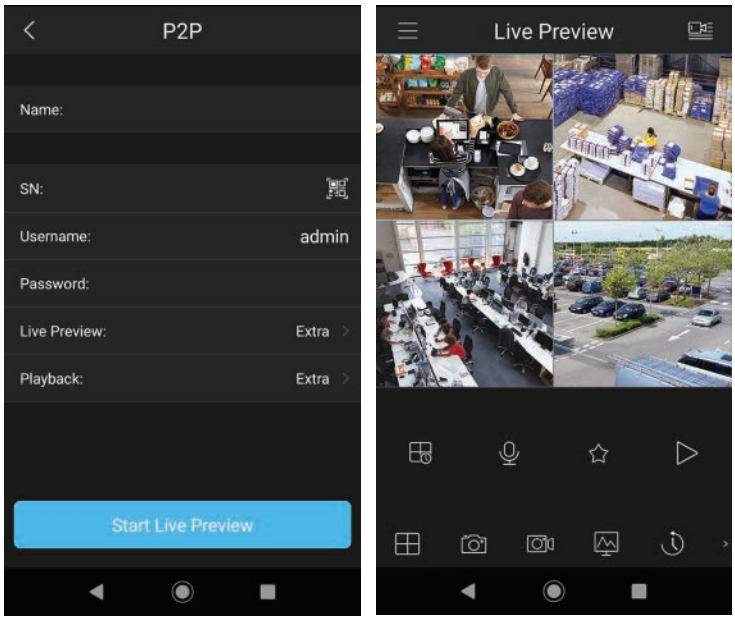

Fig. 2.9: Add Device menu and Live Preview for Android

2.1.6 Configuring Surveillance Cameras

After configuring remote view, the Startup Wizard will take you through camera setup via the **Encode** menu. This section determines the overall quality of footage recorded by your DVR. These can be adjusted to optimise for video quality or recording time, depending on your preference.

Each camera features a **Main Stream** for high quality streaming to the DVR; and a **Sub Stream** for low quality, low data streaming to your remote view phone or tablet. You can configure both of these streams for **each individual camera**, so you can choose to prioritise quality for important cameras and recording time for others.

Fig. 2.11 details **quality optimised** values and **max. recording-time** optimised values for 4K cameras. Values will vary by camera model. Note that highest bit rates will lower total recording time.

NOTE: *Total record times below are estimates. Actual total record time may differ based on captured scene activity.*

Field	Quality Optimised		Recording Time Optimised	
	Main Stream	Sub Stream	Main Stream	Sub Stream
Resolution	3840 * 2160	720 * 576	3840 * 2160	720 * 576
Frame Rate	7fps	7fps	7fps	7fps
Bit Rate Type	CBR	CBR	VBR	VBR
Bit Rate	6144KB/s	1536KB/s	2048Kb/s	320Kb/s
Approx. Total Record Time	8+ Days		24+ Days	

Fig. 2.10: Suggested camera stream values to be set for individual cameras

NOTE: *To conserve mobile data usage while using remote view, 320Kb/s Bit Rate is recommended for Sub Streams.*

Encode Menu

- In the **Encode** menu, select each camera channel and set the desired encoding options based on table above (Fig. 2.11).

Snapshot Menu

- In the **Snapshot** menu, you can configure the DVR to record image snapshots to be taken at **Timing** intervals, based on the Snapshot Recording Schedule (see Section 2.1.7), or on **Trigger**, via camera motion detection.
- This creates image files alongside your recorded footage.

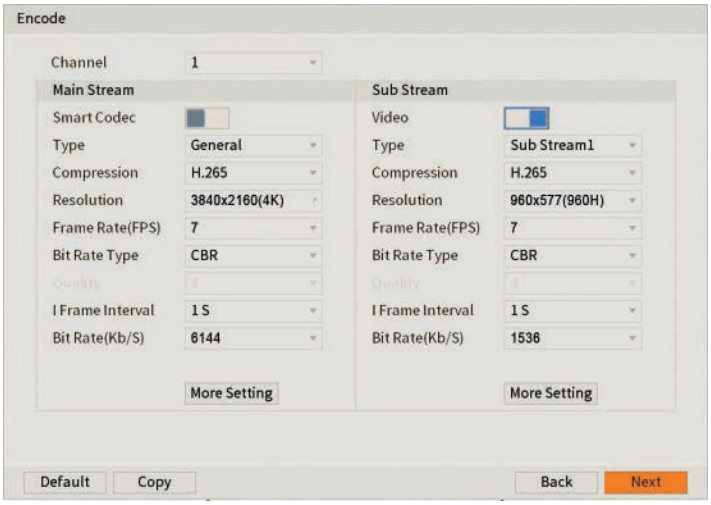

Fig. 2.11: Encode setup section channel 1 settings example (Quality Optimised)

2.1.7 Configuring Basic Storage Settings

Here, you can configure the settings for situations when the HDD is full, file size/time length of recorded video, and the settings for auto-deleting old files.

- **HDD Full:** Configure the settings for when all the read/write discs are full, and there is no more free disc.
- **Pack Mode:** Configure the time length and file length for each recorded video.
- **Auto-Delete Old Files:** Configure whether to delete the old files or not. If yes, also determines how much footage to delete in terms of either time length or file size.

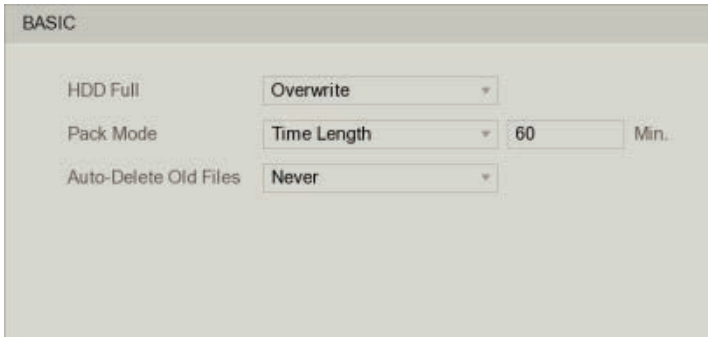

Fig. 2.12: Storage Settings

2.1.7 Configuring Recording Schedules

Finally, you will be prompted to setup your **Schedule** for recording. Here you can define the recorded footage schedule in the **Record** menu (Fig. 2.14), and the recorded image snapshot schedule in the **Snapshot** menu. By default, cameras are set to non-stop Regular recording (24 hours a day, 7 days a week).

Schedules can be set in hourly periods for individual days for each camera, with colour-coded options for:

- **General (green)** for all regular recording.
- **MD (yellow)** for recording on motion detection.
- **Alarm (red)** for recording on triggering an integrated alarm
- **MD & Alarm (orange)** for simultaneous alarm/motion detection recording
- **Intel (blue)** for recording on triggering IVS (Intelligent Video Surveillance) such as a virtual tripwire
- **POS (violet)** for point of sale transactions.

We recommend adding motion detection and intelligent recording to all channels to accompany your regular recording:

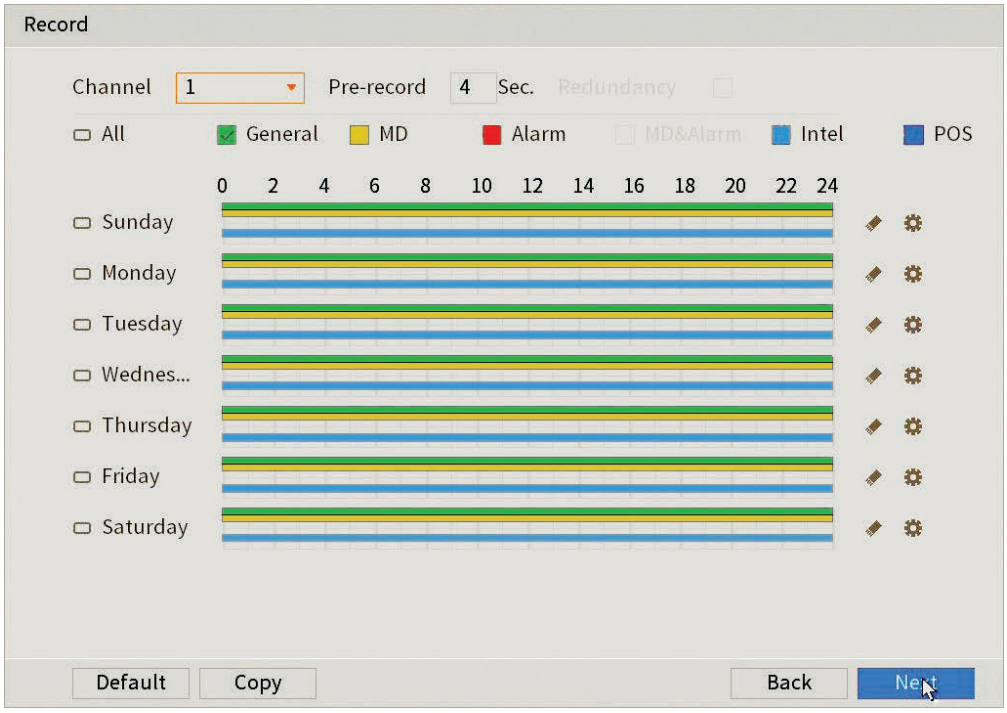

Fig. 2.13: Recording Schedule with Regular, Motion & Intelligent recording set to a 24/7 schedule.

Setting Motion Detection & Intelligent Recording

1. Click the **Channel** drop down to select **All** cameras.
2. In the days column, toggle the **All** check box to simultaneously set recording schedule parameters for every day of the week.
3. Check the yellow **MD** check box to select motion detection recording.
4. Click the schedule to fill in areas for motion detection recording. We recommend a 24/7 schedule to mirror the Regular recording schedule (Fig. 2.10).
5. Repeat steps 3 & 4 with the blue **Intel** check box to set intelligent recording (tripwire, face detection, etc).
6. Click **Next** to the confirm recording schedule changes and move on to Snapshot Schedule.

Setting Snapshot Schedule

The **Snapshot Storage Schedule** is configured similarly to the Recording Schedule. For consistency between recording and snapshots, we recommend using the **same settings used for the Recording Schedule.**

You have now set up motion detection & intelligent recording. This will be beneficial when it comes to searching footage in playback (Section 4.0). This can be edited any time from **Main Menu -> Storage -> Schedule**.

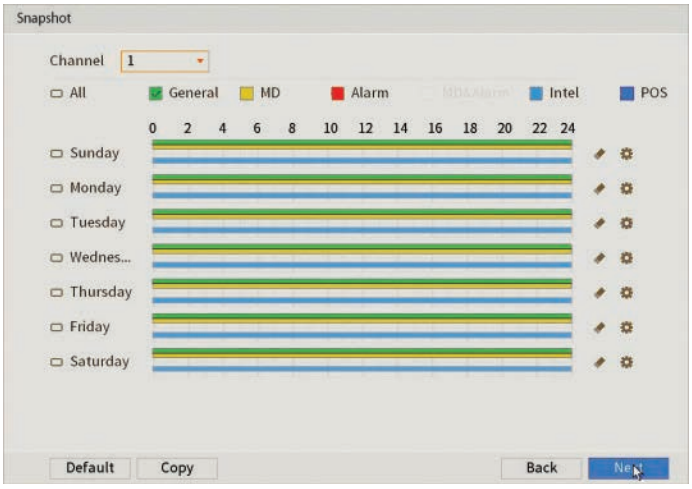

Fig. 2.14: Snapshot Schedule with Regular, Motion & Intelligent recording set to a 24/7 schedule.

2.1.8 Completed Setup

Startup setup is complete. Below is an example of a **View 8 Liveview** setup. Before mounting cameras, familiarise yourself with the user interface and menu layout.

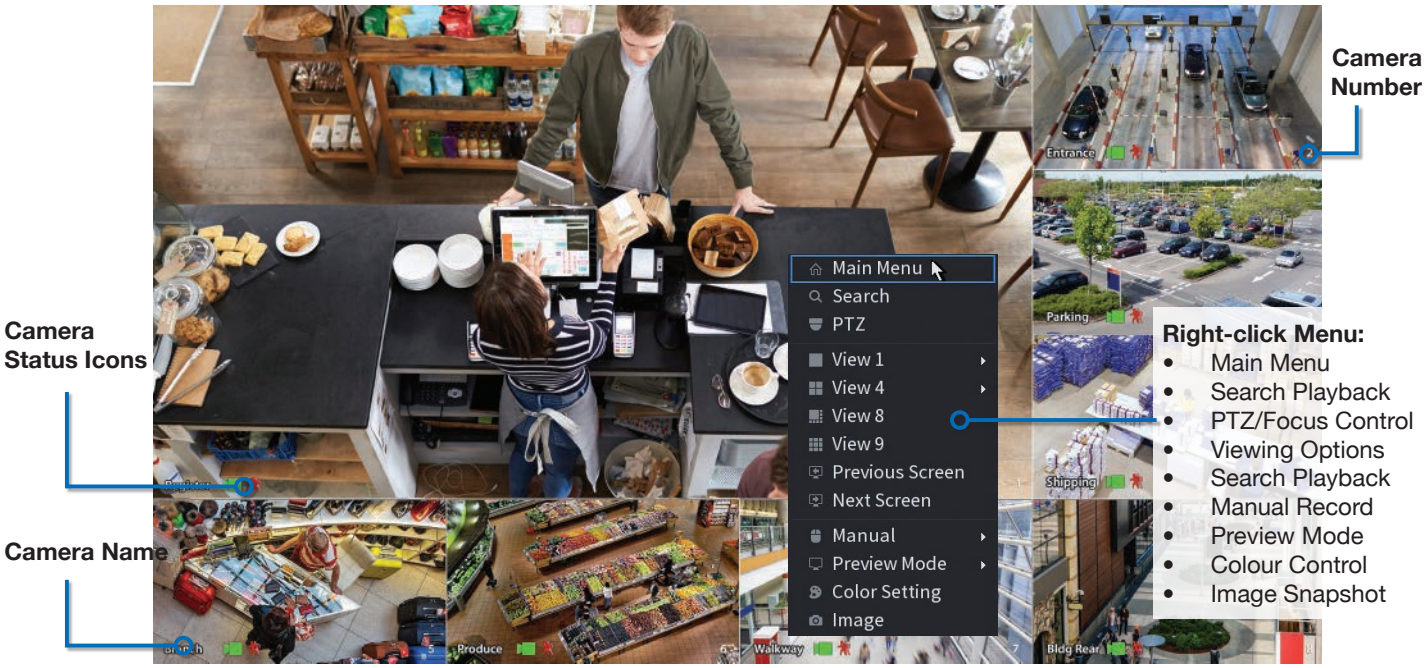

Fig. 2.15: View 8 Liveview screen with right-click menu open.

Liveview Controls

- **Double-click** on a camera window to make it full-screen; double-click again to return to normal view.
- **Right-click** to access the right-click menu.
- From the right-click menu, click **Main Menu** to access most configuration settings.

Main Menu Controls

- **Mouse wheel scroll** to view more menu options.
- **Left-click** to enter a menu.
- **Right-click** to return to the Main Menu / return to the Liveview screen from the Main Menu.

3. Installing Cameras

3.1 Maximising Camera Effectiveness

To maximise the effectiveness of your surveillance cameras, follow these guidelines for camera mounting.

- Avoid pointing cameras directly at light sources.
- Consider how the sunlight changes during the day. Mount your camera where sunlight has minimum impact.
- Avoid pointing cameras directly in front of large objects. When infrared turns on in at night or in low-light, it may be reflected back into the camera, resulting in an over-bright image.
- Consider your local and state laws before installing your cameras. This may affect where you point your surveillance cameras.
- Avoid direct exposure to weather. If possible, mount under an eave or awning. While the cameras are water-resistant, rain on the lens will affect image qualty.
- Ensure the mounting surface thickness can support triple the weight of the camera.
- Do not mount the camera behind glass as this can reduce performance and usability of surveillance in both day & night images.
- Light levels should be approximately the same between the camera and the targeted area.
- Do not place camera or cabling near high voltage wires or other sources of electrical interference.

3.2 Mounting Surveillance Cameras

Following the guidelines outlined in Fig. 3.1 to 3.4, mount your surveillance cameras.

1. Loosen the camera mount assembly by adjusting the locking screw with the included wrench.
2. Mark the screw position on the mounting surface.
3. Drill mounting holes for the wall plugs.
4. Drill a larger hole (approx. Ø10mm) so the camera cable can pass through the mounting surface.
5. Pull the cables through the building walls/ceiling from the camera to the recorder.
6. Connect the camera power/video cables, ensuring your camera is sealed away from rain and dust. If installing in an area where moisture exposure is possible, seal power and video connections with self-amalgamating tape (not included).
7. Affix the camera to the mounting surface using the supplier screws and wall plugs.
8. Reassemble the camera, loosely locking the enclosure using the locking screw and wrench.
9. Connect the camera power/video cable back to the DVR and view the video feed.
10. Adjust your camera to the desired position.
11. Tighten the locking screw(s) to complete mounting.

NOTE: *All cameras feature tri-axis adjustment and can be rotated and tilted in any direction to suit your installation needs. Simply loosen the locking screw(s) to adjust your camera's position, then tighten again once finished.*

NOTE: *Diagrams shown below assume camera to be mounted on masonry. Cameras mounted on drywall (gyprock, plasterboard, etc.) will require special mounting screws or toggles (not included).*

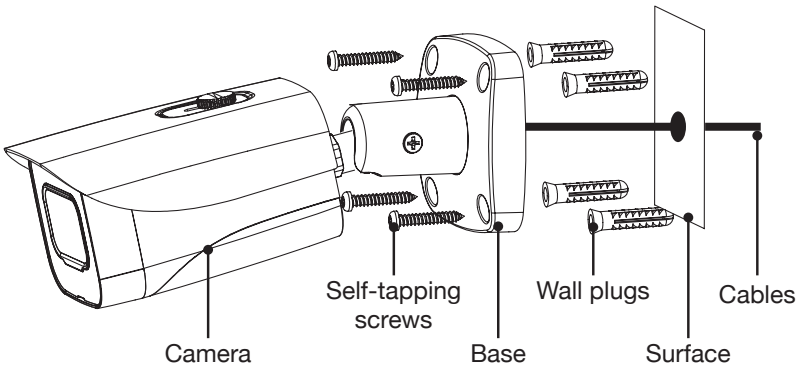

Fig. 3.1: Mounting diagram for fixed bullet

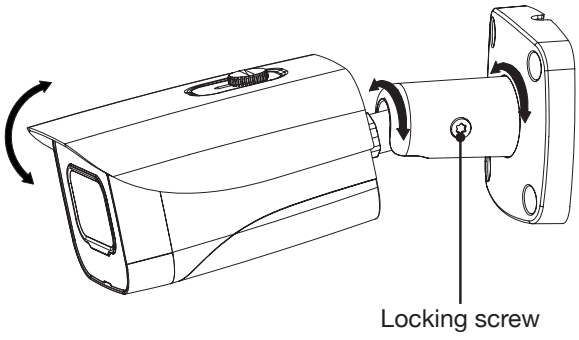

Fig. 3.2: Tri-axis fixed bullet adjustment

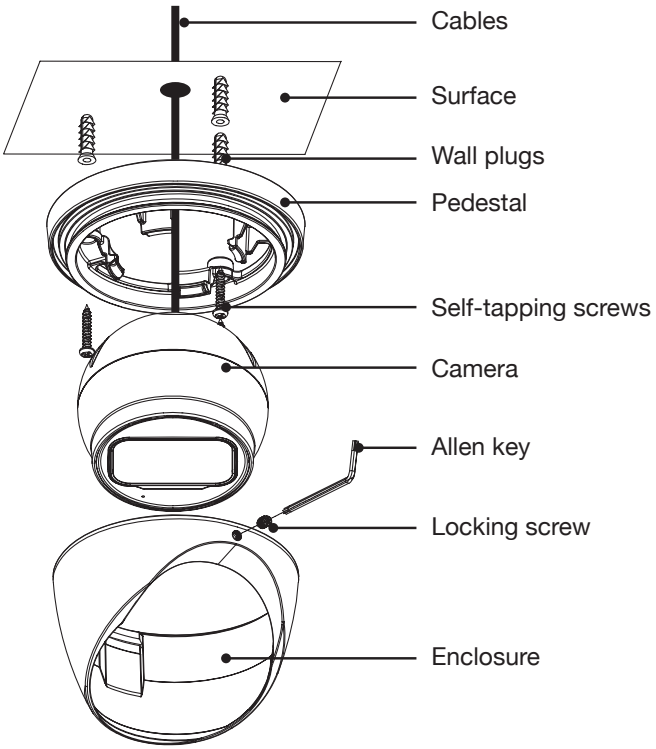

Fig. 3.3: Mounting diagram for fixed dome

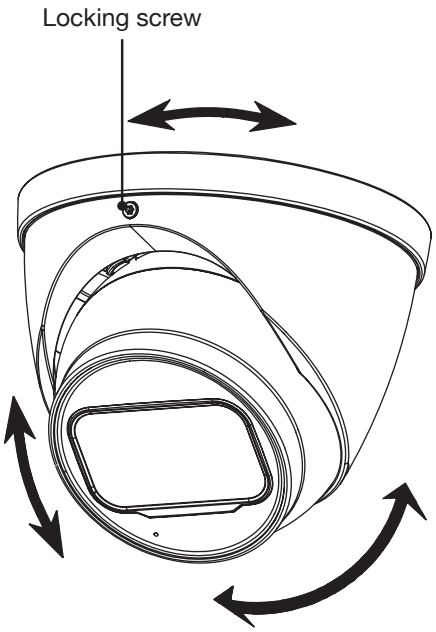

Fig. 3.4: Tri-axis fixed dome adjustment

4. Footage Playback

4.1 Accessing Stored Footage

To access footage playback, select the **Search** button from the **Main Menu**. Stored footage can be accessed by searching by date and refined by footage type (Regular, Motion Detection, Alarm, etc). The below image details the playback interface with footage selected.

After locating desired footage, you can immediately backup the video by using the playback menu. See Section 5.1.1 for more information.

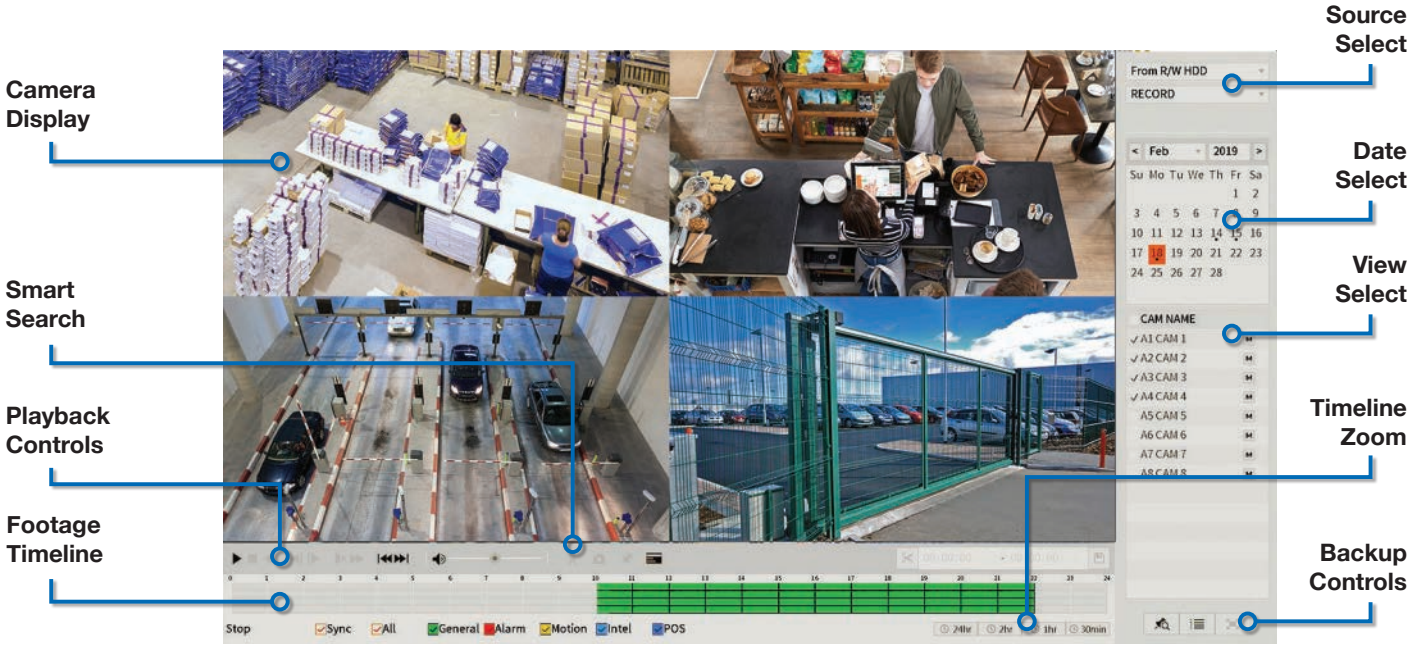

Fig. 4.1: Four camera view simultaneous footage playback.

4.1.1 Playback Footage by Date

1. Ensure that the correct **HDD** is selected and that **REC** checked in **Source Select**.
2. Using the **Date Select** calendar, choose your date for footage playback. A coloured date icon indicates stored footage is available for that day.
3. Using the **View Select** tabs, choose how many cameras you wish to view. Using the drop down menu, choose which cameras you wish to view.
4. The **Footage Timeline** should populate with stored footage, indicated by coloured bars in the timeline. Click anywhere on the timeline to begin footage playback. Other cameras will automatically sync their playback to the selected camera.
5. For greater precision playback control, zoom in on areas using the **Timeline Zoom**, up to 30 minutes.
6. Using the **Playback Controls**, you can speed up or slow down playback, place marks on key footage times and take snapshots.

4.1.2 Playback Footage by Smart Search

NOTE: *Smart search requires motion detection to be recorded to function. You can only Smart Search playback footage one camera at a time. If Smart Search is not functioning, check Section 6 for troubleshooting.*

1. As detailed in the previous section, use **Date Select** to choose the desired date for footage playback, choosing a single camera only in **View Select**.
2. Click anywhere on the Footage Timeline to begin playback. Then select the **Smart Search** button (Fig. 4.1).
3. A grid will appear overlaid onto your camera playback. Highlight an area of interest on the grid. This will define the motion detection area that is used by Smart Search.
4. Select the **Smart Search** button again to begin playback of all motion detected events in the area you selected.

By configuring your recording schedule for motion detection and by using Smart Search, you can quickly find the footage you require. For **Footage Backup**, proceed to Section 5.

5. Footage Backup & Viewing

5.1 Backup Footage to USB

Should you wish to preserve recorded footage before it is overwritten, you will need to perform a footage backup. Footage can be exported from your DVR in a **.DAV** or **.MP4** file. A .DAV file will require conversion for sharing, whereas an .MP4 file is compatible with most video players on Windows or Mac PCs. Each file type is covered in Section 5.2.

There are two different ways to backup footage to USB: via the **Search** menu through searching playback footage; and by performing a direct backup via the **Backup** menu. Both are accessed via the **Main Menu**.

NOTE: *Backup file type (**.DAV/.MP4**) selection is only available in the **Backup** menu. Backup in **Search** Menu outputs **.DAV** files only.*

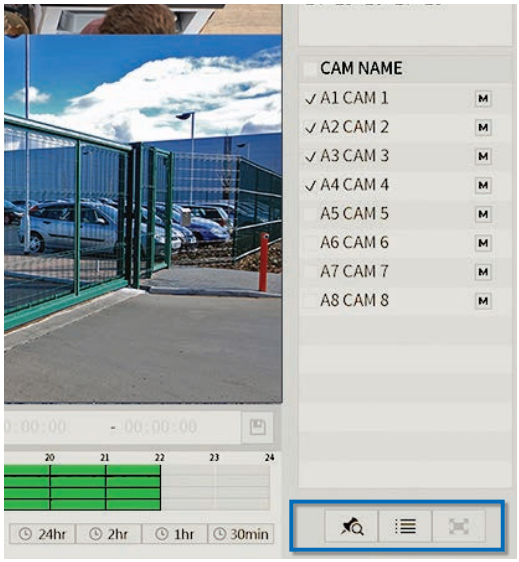

Fig. 5.1: Backup Controls in the Search Menu.

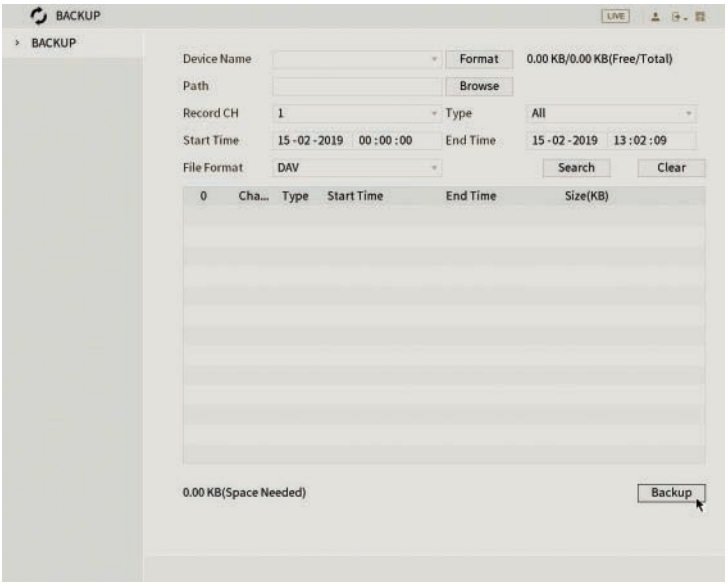

Fig. 5.2: Backup Menu

5.1.1 Backup Footage via Search Menu

Using the **Search Menu**, find start/end points of backup footage by using playback video as a reference.

1. As detailed in Section 4, locate the footage you wish to backup. Select the desired camera in single view mode.
2. Using the **Footage Timeline**, click the approximate desired time for your backup video start point. Selecting the **Clip Button** on the **Backup Controls** (Fig. 5.1) will set your start point.
3. Again, using the **Footage Timeline**, click the approximate desired time for your backup video end point. Select the **Clip Button** again to set your end point.
4. Select the **Save Button** to bring up the **Backup** menu.
5. This process can be repeated to add more clips from different channels.
6. Plug in your USB device, exiting any automated prompts, and select **Backup** to begin backup.

5.1.2 Backup Footage via Backup Menu

Using the **Backup Menu**, specify start/end dates & times across multiple cameras simultaneously. This is useful for large footage export, such as full days.

1. Select **Backup** from the **Main Menu**, or, insert your USB device and select **File Backup**.
2. Here, you can select the **Type** of footage to backup (default: All), the **Start Time** and **End Time** and what **Record Channels** to backup video from.
3. Selecting **Add** will populate the list with individual video clips ready for backup. Clips can be added or removed from the backup process using the check box.
4. Select **Backup** to begin backup.

NOTE: *Regular type footage (R) will be split into in one hour segments, unless Motion Detection type footage (M) was recorded.*

Storage capacity is also shown. Ensure you have the required USB device storage to accept the backup video.

5.2 Viewing Footage on a Computer

The following details instructions for viewing footage on Windows or Mac personal computers. Video conversion may need to take place for viewing on other devices, eg: smartphones, tablets, etc.

Now you have backed up footage to a USB device in .DAV or .MP4 format, you are ready to view on a personal computer.

- **.DAV footage** can be viewed using the **Smart Player Lite** program.
- **.MP4 footage** can be directly viewed using most players, including Windows Media Player & VLC Media Player

Choose which section to proceed with based on what file type you backed up in Section 5.1.

Fig. 5.3: Footage playback using the included Smart Player Lite for Windows

The included Smart Player Lite is for Windows only.

Smart Player Lite is for viewing recorded footage only. For CCTV liveview from your PC, use SmartPSS.

You can download both **SmartPSS** and **Smart Player (MacOS)** from **www.watchguardsystems.com**.

5.2.1 Viewing .DAV Video Files on PC with Smart Player Lite

***Note: Smart Player Lite** is automatically copied onto the USB device when performing footage backup from the DVR.*

1. The .DAV file format is playable only by your DVR or the **Smart Player Lite** media player and cannot be played on mainstream media players without file type conversion.
2. To view .DAV footage in Smart Player Lite, either click the **Add Files** button and select the file, or drag & drop the file onto a selected play window.
3. Using the .DAV file, Smart Player Lite adds functionality similar to your DVR in footage playback, such as synchronous playback of multiple channels.
4. Open the **Options menu**. Here, you can set the directories and formats for saved snapshots (.BMP/.JPG) and videos (.DAV/.AVI). You can also adjust video aspect ratio and other options.
5. You can **export clips** by pressing the **Record button** once to begin recording, then again to end recording.
6. Similarly, you can **take snapshots** by pressing the **Snapshot button** once.

5.2.2 Viewing .MP4 Video Files

The .MP4 file format is a common video format, compatible with Windows Media Player and most other video players.

.MP4 videos can also be played by **VLC Media Player**. This free open source player is available across many platforms, including:

- **Desktop:** Windows, Mac OS and Linux
- **Mobile:** Android and iOS

1. Access your USB device and open your backup .MP4 footage video using one of the media players mentioned above.
2. .MP4 files **cannot** be viewed using Smart Player Lite. They do not retain time/date data like .DAV files.

6. Intelligent Functions

NOTE: *Before enabling Face Detection or Tripwire, ensure that you've configured Intelligent recording schedules (refer to 2.1.5 Configuring Recording Schedules), or these functions will not work.*

Intelligent Video Systems (IVS) let your CCTV system go beyond surveillance, delivering advanced & powerful detection tools. When properly configured, these functions can alert you to suspicious activity in real time via email/smartphone notification and let you easily search through surveillance footage via event history.

- **Face Detection** - Uses smart technology to detect human faces, snapshotting and saving them in a directory.
- **Tripwire** - Detect when any object crosses a set warning line in the video.
- **Intrusion** - Detect when any object intrudes inside a set zone in the video.
- **Abandoned/Missing Object** - Detects if an object has been left/taken from a set zone in the video.

NOTE: *Only Channel 1 can use Face Detection. Face detection and other IVS cannot be used at the same time!*

6.1 Face Detection

6.1.1 Enabling Face Detection

1. From the Main Menu, select **Face Detect.** The Smart Search tab will be selected by default - select the **Parameters** tab.
2. Select the **Channel** that you want to enable Face Detection for *(only one channel can be selected)*.
3. Click the **Enable** switch to activate Face Detection.
4. Select **Rule -> Setting** to select the area of the camera where motion detection is enabled. By default, the entire recording area is covered.

6.1.2 Face Detection Trigger

The other options on the **Parameters** tab configure the actions taken after a face detection event is triggered.

1. **Period** sets the times of day that **Face Detection** is activated (always on by default).
2. **Alarm Out** sets an external alarm to activate whenever a face is detected.
3. **Show Message** pops up a a message on the recorder monitor to notify users when a face is detected.
4. **Alarm Upload** updates the alarm system status on the network (Unused for this system).
5. (Requires internet connection & setup) **Send Email** notifies a specified email address whenever a face is detected, also attaching a photo of the face.
6. **Latch** time sets how long the system waits after detecting a face before detecting. This prevents the system from entering duplicate faces (10 seconds by default).
7. **Post Record** sets the amount of time recorded after the face is detected. This clip can be played back while searching through faces (10 seconds by default).
8. (PTZ camera only; not included) **PTZ** settings set PTZ behaviors in response to a face detection, such as selecting a Tour to perform, etc.
9. **Buzzer** sets the DVR to beep whenever a face is detected.
10. **Voice Prompts** plays a designated .wav file in response to face detection.
11. Click **Apply** to save changes.

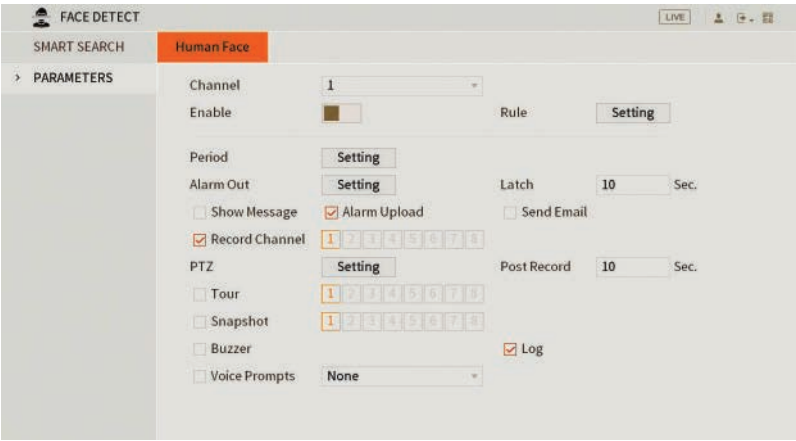

Fig. 6.1: Face Detection Parameters menu.

6.1.3 Smart Search (Face Detect)

1. From the Main Menu, select **Face Detect.** The Smart Search tab will be selected by default.
2. From here, you can search through every face detection event in a certain period of time. Test this by setting a **Begin TIme** and **End Time**, then clicking **Search**.
3. If any faces were detected in the specified timeframe, they will be displayed along with a timestamp. **Double-click** on one of the faces to see the full snapshot.
4. If a Post Record time has been set (see 6.1.2 Face Detection Settings), you can also play a **video snippet** of the time the face was detected by pressing the **Play button** at the bottom left.

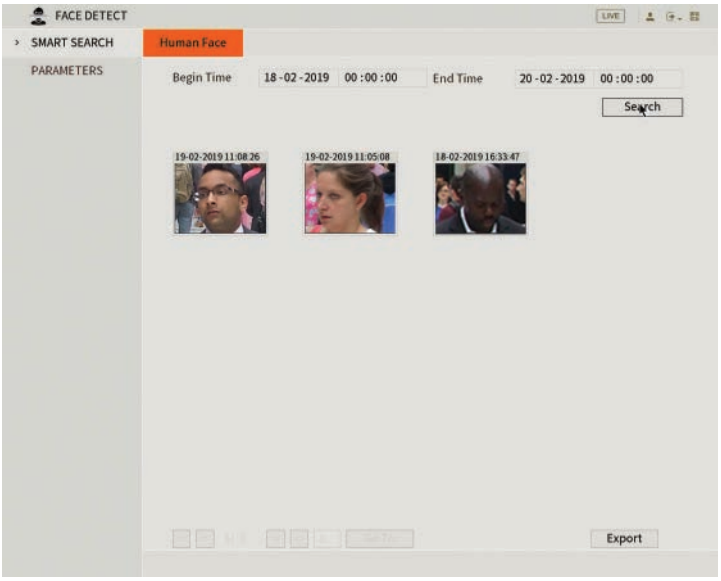

Fig. 6.2: Face Detection Smart Search.

6.2 Tripwire & IVS Setup

6.2.1 Tripwire Setup

1. From the Main Menu, select **IVS**.
2. Select the **Channel** you want to set up for.
3. Press the **Add** button at the bottom right. This will create a new IVS setting (Tripwire by default).
4. Click the **Draw button** to bring up the Draw screen (Fig. 6.3).
5. **Left-click** on the screen to start drawing the Tripwire line. **Left-click again** to finish the line (optionally, you can add additional corners to the line by continuing to left-click). **Right-click** to finish placing the line.
6. In the top left window, you can alter the **Direction** that the line must be passed from to activate the event, as indicated by the arrow going across the line (A to B, B to A, or both ways).
7. Click OK to finish.
8. Click the **Trigger Button** to bring up the **Trigger menu,** configuring what actions are taken once the IVS event is triggered. These configuration options are identical to the ones shown in 6.1.2 Face Detection Trigger.
9. Click OK to finish.
10. Click the **Enable box** to turn on the IVS rule.
11. Click **Apply** to save changes.

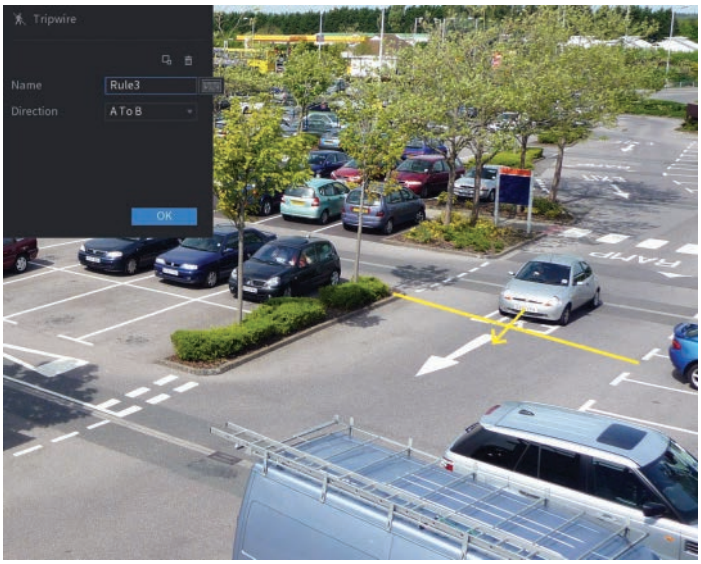

Fig. 6.3: Tripwire Draw screen.

6.2.2 Intrusion/Abandoned/Missing Setup

Intrusion, Abandoned Object and Missing Object are all set up in similar ways to Tripwire - simply select which IVS you want to set up from **Type menu** (Fig. 6.4).

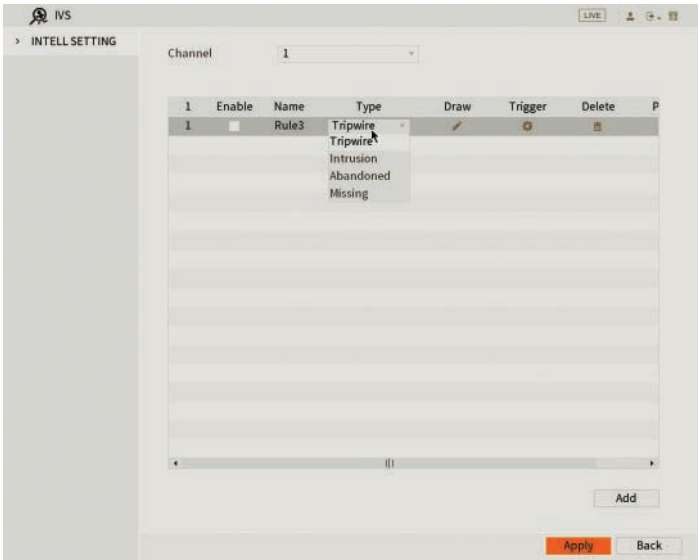

Fig. 6.4: IVS setup screen.

7. Troubleshooting

This concludes the Quick Start Guide covering the basic functionality of your Watchguard Surveillance system. Should you encounter any difficulties with your setting up and using your system, please first refer to the tables below or visit the Contact Us section on the Watchguard website at **www.watchguardsystems.com**.

Area	Menu Navigation	Guide Ref.
DVR Security Setup	Main Menu -> Account	Section 2.1.2
Changing General Settings	Main Menu -> System -> General	Section 2.1.4
DVR Network Setup	Main Menu -> Network -> TCP/IP	Section 2.1.5
P2P & Remote View Setup	Main Menu -> Network -> P2P	Section 2.1.5
Configuring Cameras	Main Menu -> Camera -> Encode	Section 2.1.6
Changing Recording Schedule	Main Menu -> Storage -> Schedule	Section 2.1.7
Accessing Playback Footage	Main Menu -> Video | Search	Section 4
Backing Up Footage	Main Menu -> Video | Backup	Section 5

Problem	Troubleshooting	Guide Ref.
The DVR won't power on.	• Ensure that the power cable is firmly connected to the recorder and to the wall socket. • Confirm that there is power from the outlet.	Section 1.2
The DVR is not being displayed on the monitor.	• Ensure the display cable is firmly connected to the recorder & monitor. • Ensure you have selected the correct input on your monitor. • Test the recorder's display output with different monitor.	Section 1.2
Cameras aren't displaying live video.	• Ensure that you are not in playback mode, right mouse click to exit. • Ensure power is connected to cameras and that the BNC connectors are firmly connected to the DVR via the camera cable. • Swap with known working cables and cameras to test.	Section 1.2
The DVR is displaying No HDD.	• Check if the HDD is properly connected.	-
The DVR is not recording video.	• Check if the HDD is installed and properly connected. • Check that the recording method you have chosen to implement is in use.	-
Motion is not being detected or recorded by the DVR or unable to Smart Search.	• By default motion detection is enabled, however, check by navigating to Main Menu -> Setting | Event -> Video Detect. The Enable check box should be checked for all relevant channels. • Ensure that a period has been selected in the Recording Schedule for motion detection recording and that the period is filled in yellow. • Check motion sensitivity and adjust motion detection area, see: Main Menu -> Setting | Event -> Video Detect: Region | Set.	Section 2.1.7
Cannot connect to DVR on smartphone or tablet.	• Ensure that the DVR & device are connected to the Internet and that the connection is strong enough to receive video (min. 3G speeds). • Ensure that the admin password is correct in the iDMSS/gDMSS/ Easyviewer app. • Ensure the extra stream settings are set to recommended settings.	Section 2.1.5
The recorder will not detect a USB device for backup.	• Ensure that the USB drive is formatted to FAT32 or NTFS. • Try using another USB flash drive to test compatibility.	Section 5.1
Face Detection / IVS features are not working correctly.	• Ensure that Intel (blue) recording schedules have been set up in Schedule. • Ensure that Enable has been checked for each rule on the IVS screen.	Section 2.1.7 Section 6.1 Section 6.2

8. Optional Accessories

Accessory	Image
Adapter/Junction Box for Domes VSBKTB204W	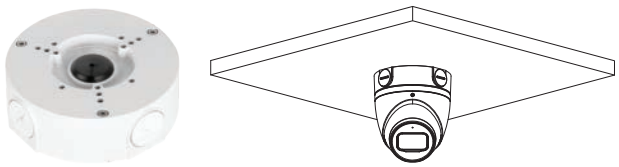
Right Angle Bracket for Domes VSBKTB204W	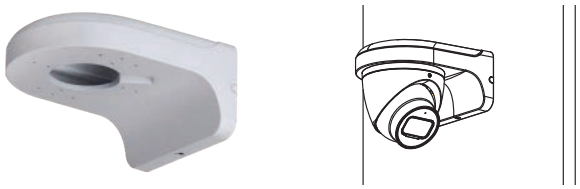
Right Angle Bracket + Pole Mount Bracket for Domes VSBKTA121 + VSBKTA150	
Adapter/Junction Box for Bullets VSBKTA121	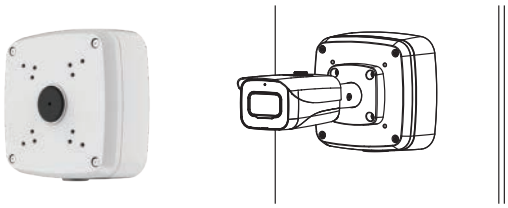
Corner Mount Camera Bracket + Junction Box for Bullets VSBKTA121 + VSBKTB204W	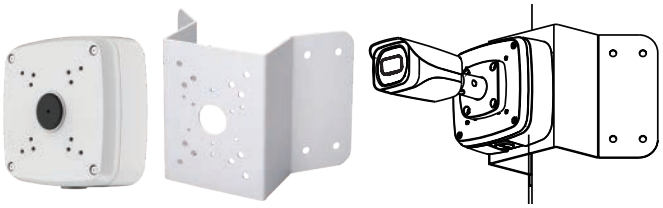
Pole Mount Camera Bracket + Junction Box for Bullets VSBKTA121 + VSBKTA150	
30m Combined Power & 4K BNC Video Lead VIDPWR30RG59 Take your surveillance install further with 30m power / BNC video leads for your cameras (20m included in kit).	
600VA/1500VA Line Interactive UPS UPS-A600-L (600VA / 360W) UPS-A1500-L (1500VA / 900W) Protect against overloads and keep your system temporarily powered in the event of an outage. 1500VA recommended for 16 channel system.	

Notes

Watchguard™

You deserve to feel safe, secure & protected™

For more information, please visit:

www.watchguardsystems.com

Version: WGDVR-Q119