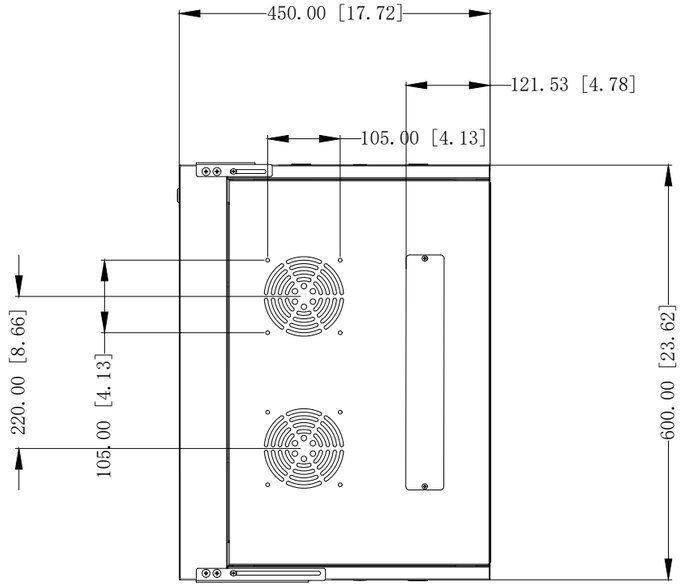
450.00 [17.72]
121.53 [4.78]
105.00 [4.13]
220.00 [8.66]
105.00 [4.13]
600.00 [23.62]

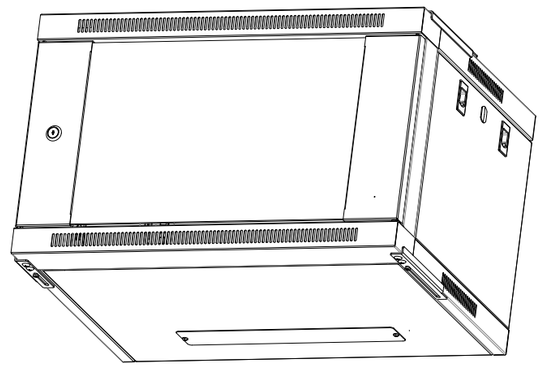

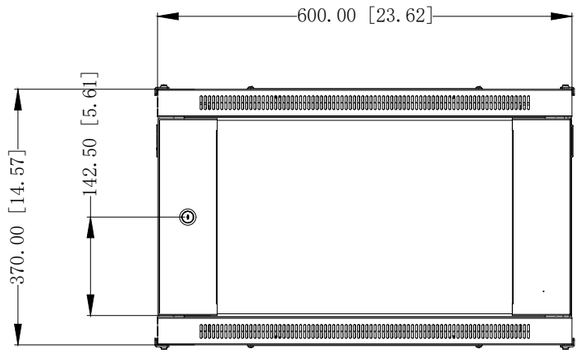
600.00 [23.62]
142.50 [5.61]
370.00 [14.57]

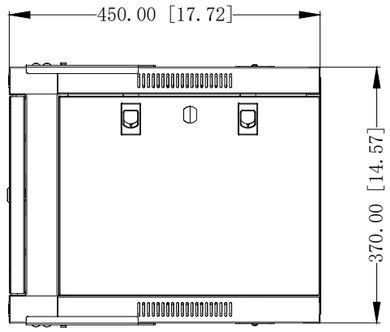
450.00 [17.72]
370.00 [14.57]

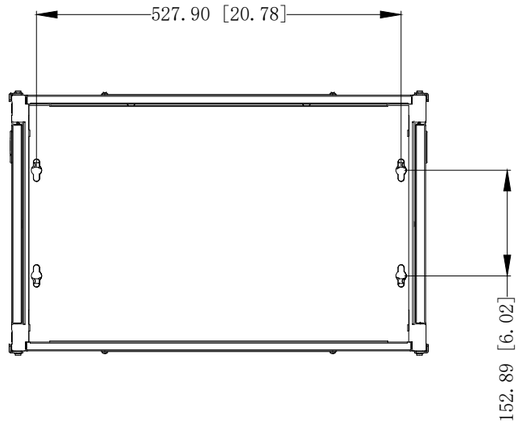
527.90 [20.78]
152.89 [6.02]

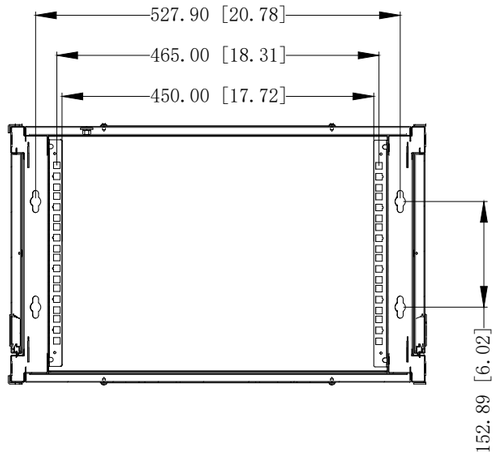
527.90 [20.78]
465.00 [18.31]
450.00 [17.72]
152.89 [6.02]

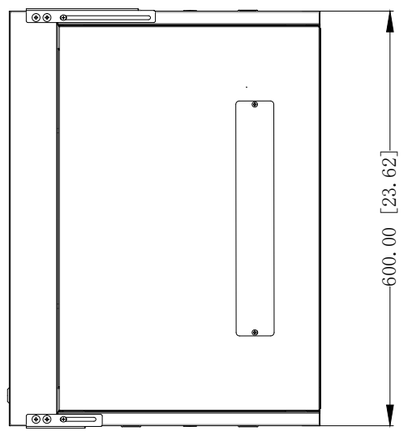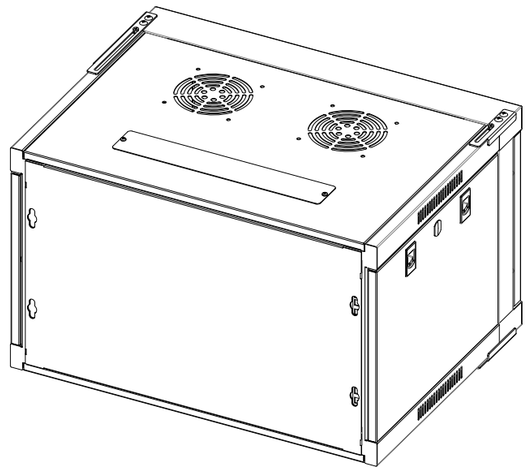
600.00 [23.62]