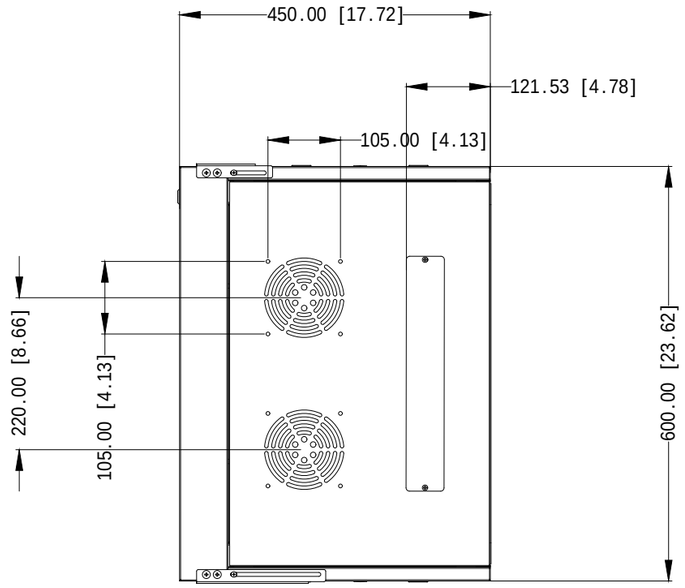
450.00 [17.72]
121.53 [4.78]
105.00 [4.13]
220.00 [8.66]
105.00 [4.13]
600.00 [23.62]

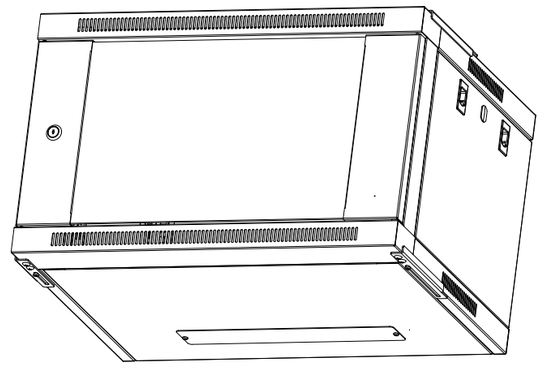

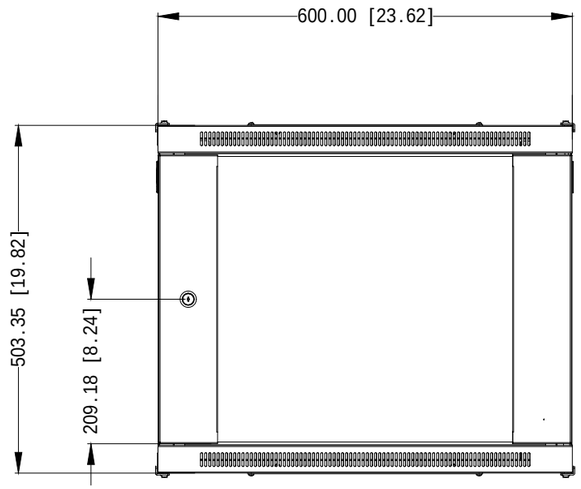
600.00 [23.62]
503.35 [19.82]
209.18 [8.24]

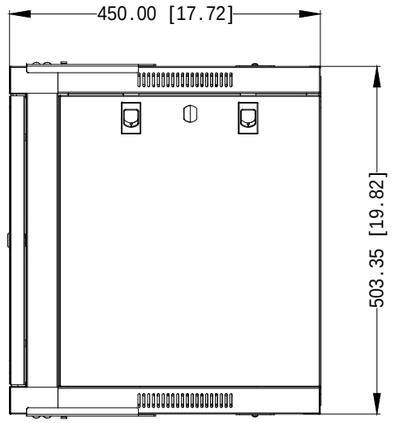
450.00 [17.72]
503.35 [19.82]

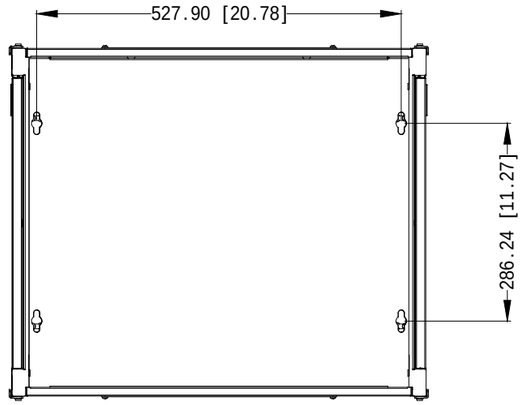
527.90 [20.78]
286.24 [11.27]

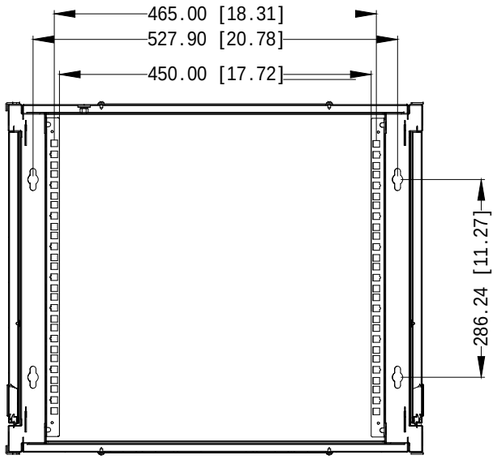
465.00 [18.31]
527.90 [20.78]
450.00 [17.72]
286.24 [11.27]

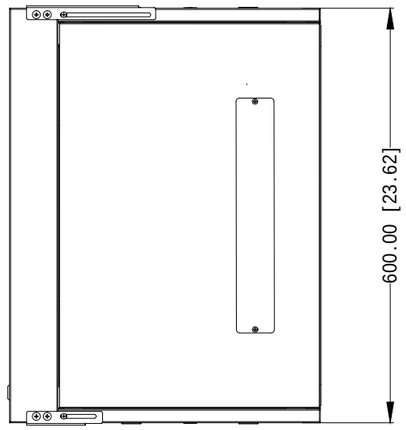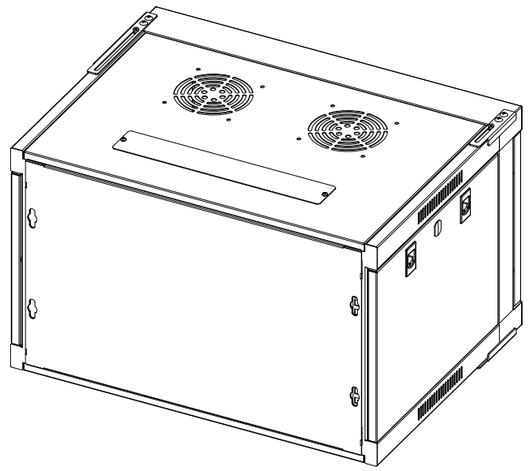
600.00 [23.62]